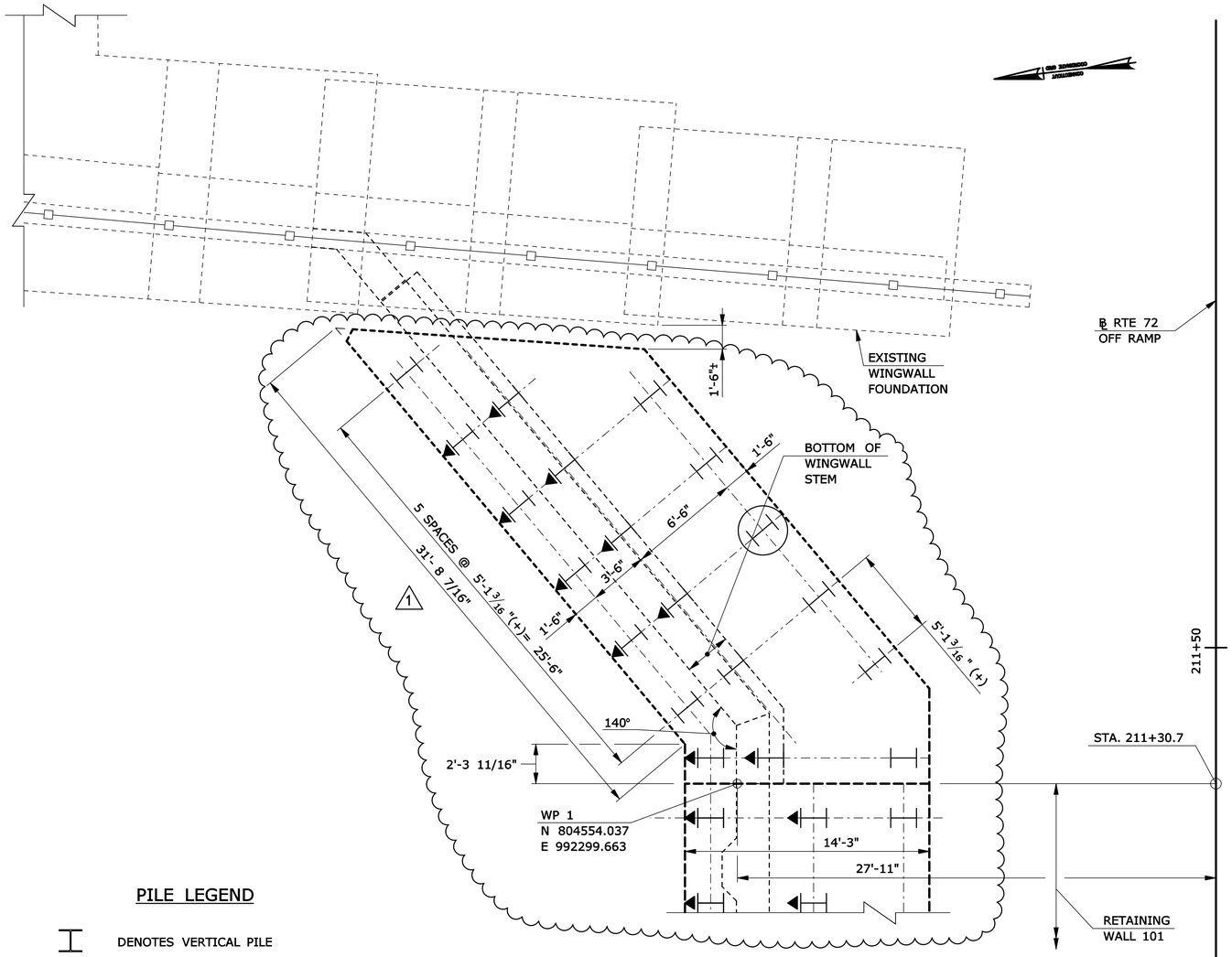


## PILE LAYOUT PLAN - SOUTHWEST WINGWALL

SCALE: 1/4" = 1'-0"

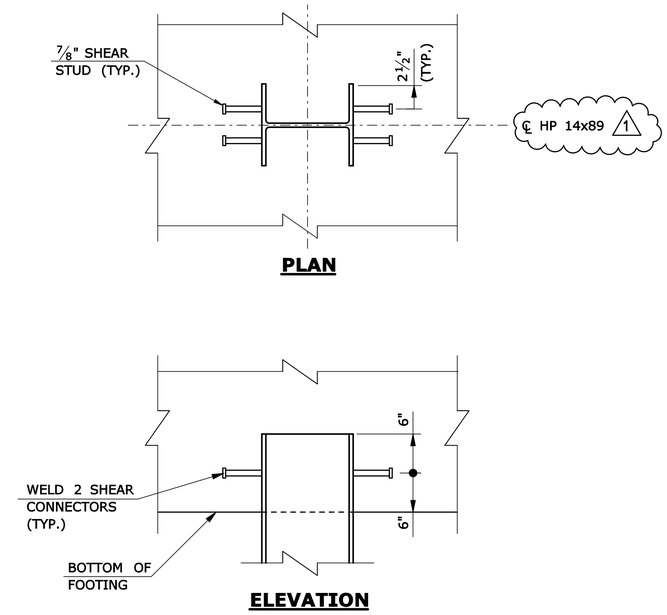


## PILE ANCHORAGE DETAIL

SCALE: 1" = 1'-0"

### PILE LEGEND

DENOTES VERTICAL PILE

DENOTES PDA TEST PILE

DENOTES BATTER PILE 1:4 IN THE DIRECTION INDICATED 1

### NOTES:

1. PILE SPACING MEASURED ALONG CENTERLINE OF PILES.
2. PRIOR TO DRIVING THE PILES, THE CONTRACTOR SHALL SUBMIT TO THE ENGINEER FOR REVIEW AND APPROVAL HIS METHOD OF PILE DRIVING.
3. ALL PILES SHALL BE HP 14x89 CONFORMING TO THE REQUIREMENTS OF ASTM A709 GRADE 50. 1
4. PILE POINT REINFORCEMENT AND SPLICES SHALL BE PREFABRICATED. THE CONTRACTOR SHALL SUBMIT PILE POINT REINFORCEMENT AND SPLICE DETAILS TO THE ENGINEER FOR REVIEW AND APPROVAL.
5. MAXIMUM DESIGN PILE LOAD = 63 TONS (STRENGTH I)
   MAXIMUM DESIGN PILE LOAD = 45 TONS (SERVICE I)
   DOWNDRAG = 23 TONS 1

   ULTIMATE PILE CAPACITY = 100 TONS
6. ESTIMATED PILE LENGTH = 30.0 FT (VERTICAL PILE)
   31.0 FT (BATTER PILE)
   35.0 FT (TEST PILE)
7. THE COST OF THE SHEAR CONNECTORS IS INCLUDED IN THE ITEM FURNISHING STEEL PILES.
8. THE ULTIMATE PILE CAPACITY IS EQUAL TO: 1

   FACTURED DESIGN LOAD + DOWNDRAG
   Ø

DESIGNED BY:
URS
URS CORPORATION AES
500 ENTERPRISE DRIVE
ROCKY HILL, CT 06067
STATE OF CONNECTICUT DAVID G. GEISSERT No. 17425 LICENSED PROFESSIONAL ENGINEER
David G Geissert
2011.10.10
14:17:43 -04'00'

**ADDENDUM NO. 2**

**BRIDGE BUSWAY RTE. 71 OVER RTE. 72-088-177-03-01**

| REV. | DATE | REVISION DESCRIPTION | SHEET NO. |
|---|---|---|---|
| 1 | 10/7/11 | ADDENDUM NO. 2 - REVISED PILES & FOOTING | 03.02.007.A2 |

THE INFORMATION, INCLUDING ESTIMATED QUANTITIES OF WORK, SHOWN ON THESE SHEETS IS BASED ON LIMITED INVESTIGATIONS BY THE STATE AND IS IN NO WAY WARRANTED TO INDICATE THE CONDITIONS OF ACTUAL QUANTITIES OF WORK WHICH WILL BE REQUIRED.

Plotted: 10/10/2011

DESIGNER/DRAFTER: K. BARKER
CHECKED BY: C. GREGORY
SCALE AS NOTED

STATE OF CONNECTICUT
DEPARTMENT OF TRANSPORTATION

Filename: P:\088_H035\Struct_Bridge\MSta_Sheet_Files\SB_MSH_Br03913_088_H035_S07_FTPL-1.dgn

SIGNATURE/BLOCK: STATE OF CONNECTICUT DAVID G. GEISSERT No. 17425 LICENSED PROFESSIONAL ENGINEER
URS CORPORATION
500 ENTERPRISE DRIVE
ROCKY HILL, CT 06067

PROJECT TITLE: NEW BRITAIN - HARTFORD BUSWAY
NEW BRITAIN SECTION A

TOWN: NEW BRITAIN

DRAWING TITLE: SOUTHWEST WINGWALL PILE LAYOUT & DETAILS

PROJECT NO. 088-177
DRAWING NO. S-07
SHEET NO. 03.02.007.A2

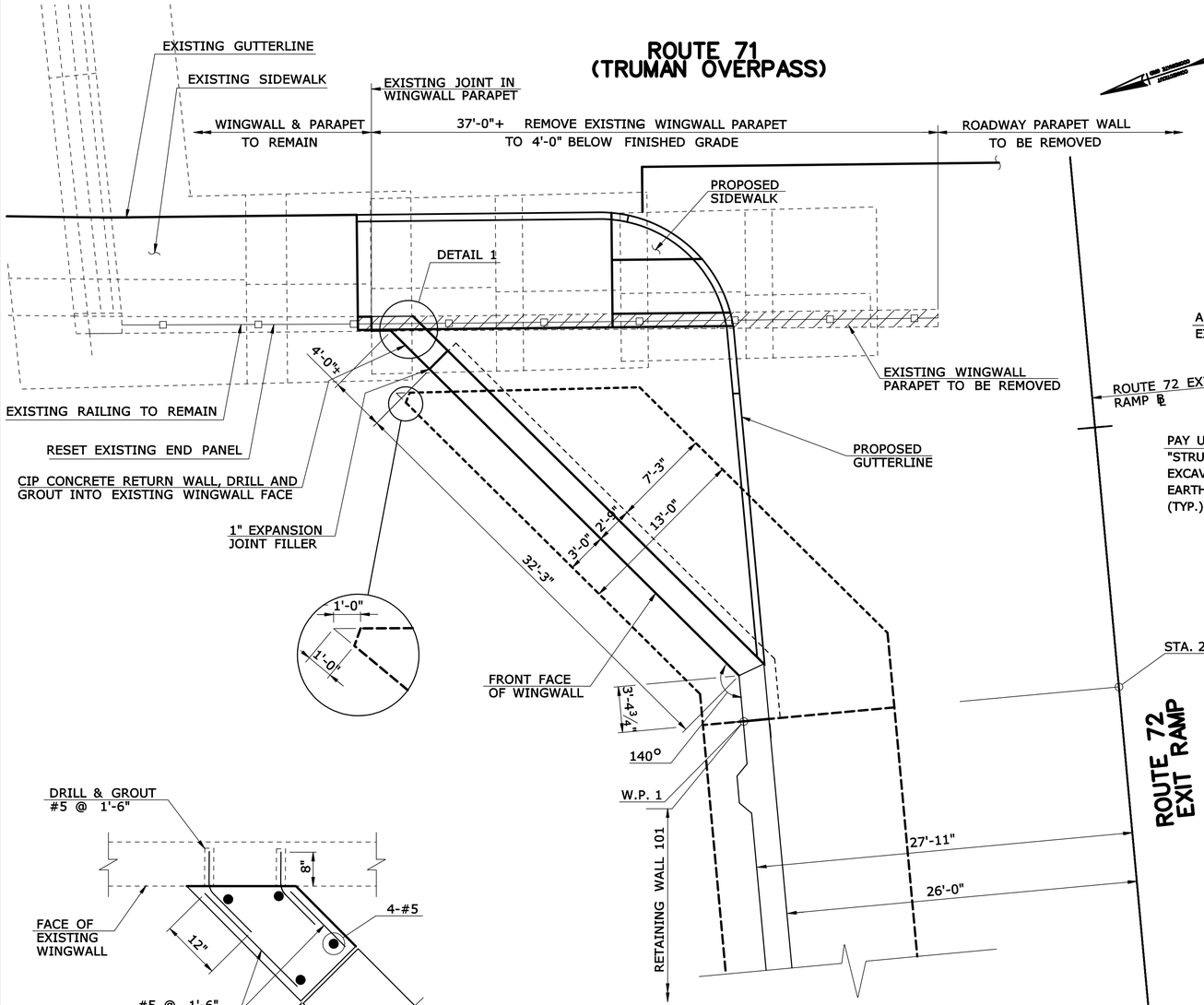


**PLAN**
SCALE: 3/16" = 1'-0"

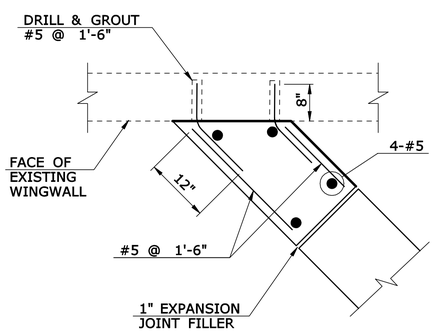


**DETAIL 1**
N.T.S.

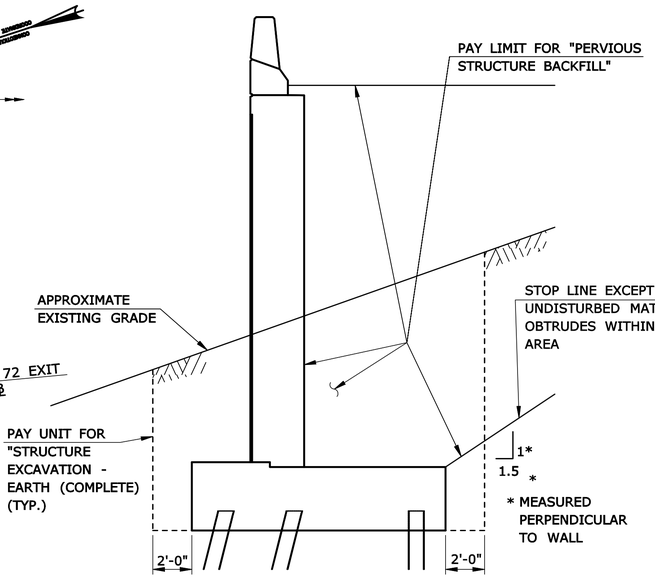


**WINGWALL WITH FOOTING PAY LIMITS**
SCALE : ¼" = 1'-0"

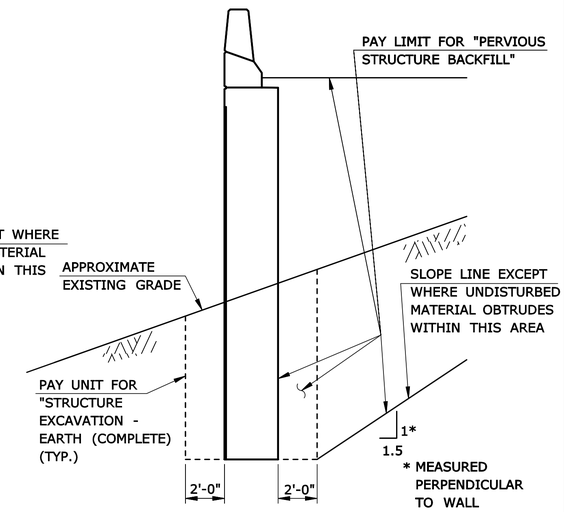


**WINGWALL WITHOUT FOOTING PAY LIMITS**
SCALE : ¼" = 1'-0"

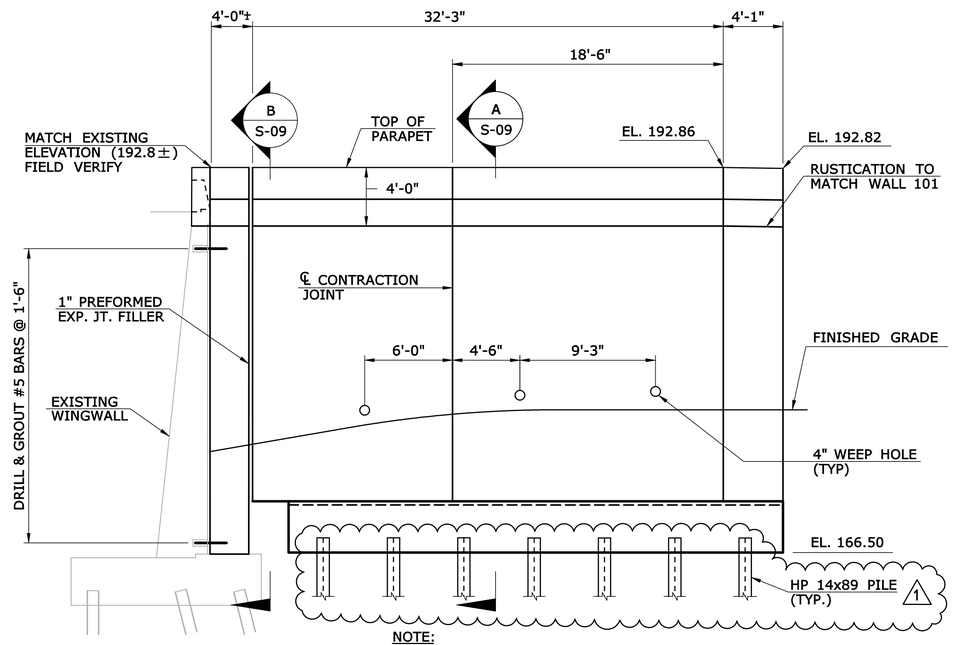


NOTE:
RAILING NOT SHOWN FOR CLARITY

**SOUTHWEST WINGWALL ELEVATION (DEVELOPED)**
SCALE: 3/16" = 1'-0"

## NOTES:

1. THE COST OF THE 1" PREFORMED EXPANSION JOINT FILLER IS INCLUDED IN THE COST OF CLASS "A" CONCRETE.

**ADDENDUM NO. 2**

**BRIDGE BUSWAY RTE. 71 OVER RTE. 72-088-177-03-01**

| REV. | DATE | REVISION DESCRIPTION | SHEET NO. |
|---|---|---|---|
| 1 | 10/7/11 | ADDENDUM NO. 2 - REVISED PILE SIZE | 03.02.008.A2 |

THE INFORMATION, INCLUDING ESTIMATED QUANTITIES OF WORK, SHOWN ON THESE SHEETS IS BASED ON LIMITED INVESTIGATIONS BY THE STATE AND IS IN NO WAY WARRANTED TO INDICATE THE CONDITIONS OF ACTUAL QUANTITIES OF WORK WHICH WILL BE REQUIRED.

Plotted: 10/10/2011

DESIGNER/DRAFTER: K. BARKER
CHECKED BY: C.G.
SCALE AS NOTED

STATE OF CONNECTICUT
DEPARTMENT OF TRANSPORTATION

SIGNATURE/BLOCK: STATE OF CONNECTICUT · CHRISTOPHER G. GEISERT · LICENSED PROFESSIONAL ENGINEER · No. 17425

URS CORPORATION
500 ENTERPRISE DRIVE
ROCKY HILL, CT 06067

Filename: P:\088_H035\Struct_Bridge\MSta_Sheet_Files\SB_MSH_Br03913_088_H035_S08_SW_WW-1.dgn

PROJECT TITLE:
NEW BRITAIN - HARTFORD BUSWAY
NEW BRITAIN SECTION A

TOWN: NEW BRITAIN

DRAWING TITLE:
SOUTHWEST WINGWALL PLAN & ELEVATION

PROJECT NO. 088-177
DRAWING NO. S-08
SHEET NO. 03.02.008.A2

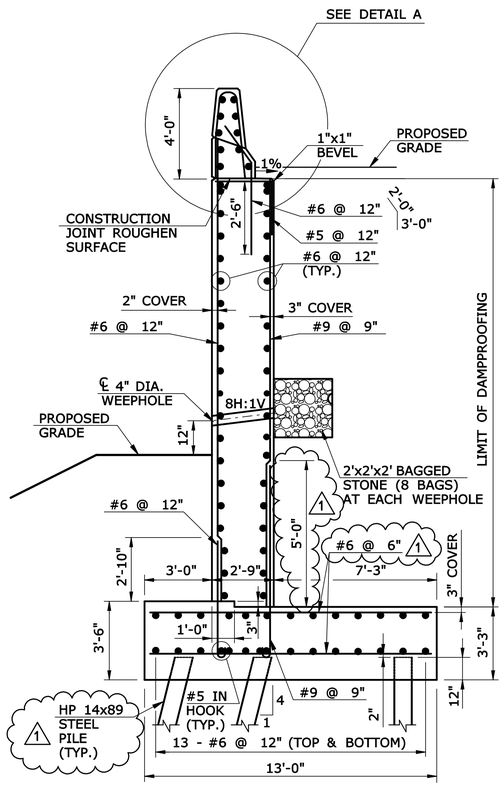


**SECTION A S-08**

SCALE: 3/8" = 1'-0"

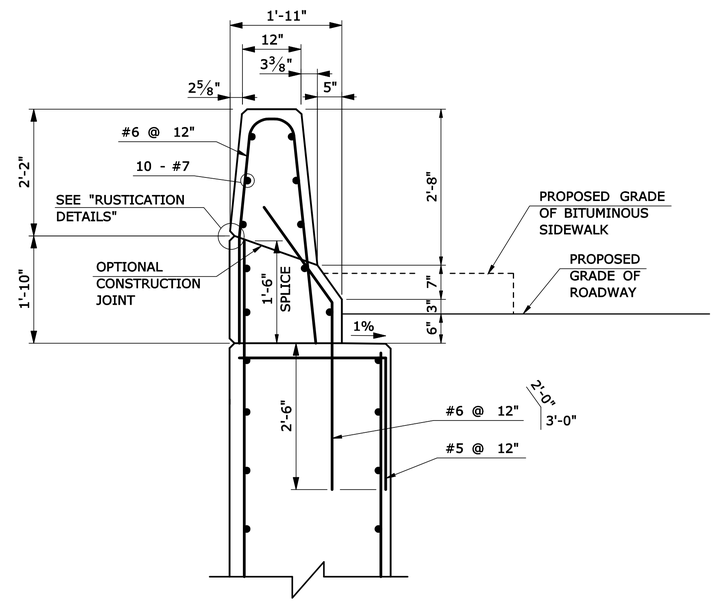


**DETAIL A**

SCALE: 3/4" = 1'-0"

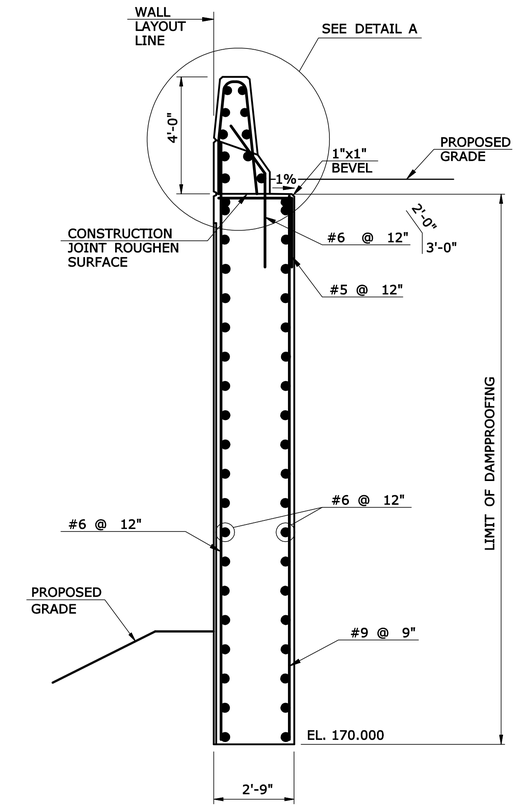


**SECTION B S-08**

SCALE: 3/8" = 1'-0"

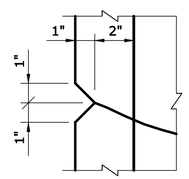


**RUSTICATION DETAIL**

SCALE : 3" = 1'-0"

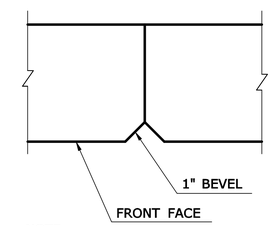


NOTE:

NO REINFORCEMENT SHALL PASS THROUGH CONTRACTION JOINT.

**CONTRACTION JOINT DETAIL**

NOT TO SCALE

**ADDENDUM NO. 2**

**BRIDGE BUSWAY RTE. 71 OVER RTE. 72-088-177-03-01**

| REV. | DATE | REVISION DESCRIPTION | SHEET NO. |
|---|---|---|---|
| 1 | 10/7/11 | ADDENDUM NO. 2 - REVISED PILE & REINF. | 03.02.009.A2 |

THE INFORMATION, INCLUDING ESTIMATED QUANTITIES OF WORK, SHOWN ON THESE SHEETS IS BASED ON LIMITED INVESTIGATIONS BY THE STATE AND IS IN NO WAY WARRANTED TO INDICATE THE CONDITIONS OF ACTUAL QUANTITIES OF WORK WHICH WILL BE REQUIRED.

Plotted: 10/10/2011

DESIGNER/DRAFTER: K. BARKER

CHECKED BY: C. GREGORY

SCALE AS NOTED

STATE OF CONNECTICUT
DEPARTMENT OF TRANSPORTATION

Filename: P:\088_H035\Struct_Bridge\MSta_Sheet_Files\SB_MSH_Br03913_088_H035_S09_DTLS-1.dgn

SIGNATURE/ BLOCK:

STATE OF CONNECTICUT DAVID G. GEISSERT LICENSED PROFESSIONAL ENGINEER No. 17425

URS CORPORATION
500 ENTERPRISE DRIVE
ROCKY HILL, CT 06067

PROJECT TITLE:

**NEW BRITAIN - HARTFORD BUSWAY**
**NEW BRITAIN SECTION A**

TOWN: **NEW BRITAIN**

DRAWING TITLE: **SOUTHWEST WINGWALL DETAILS**

PROJECT NO. **088-177**

DRAWING NO. **S-09**

SHEET NO. **03.02.009.A2**